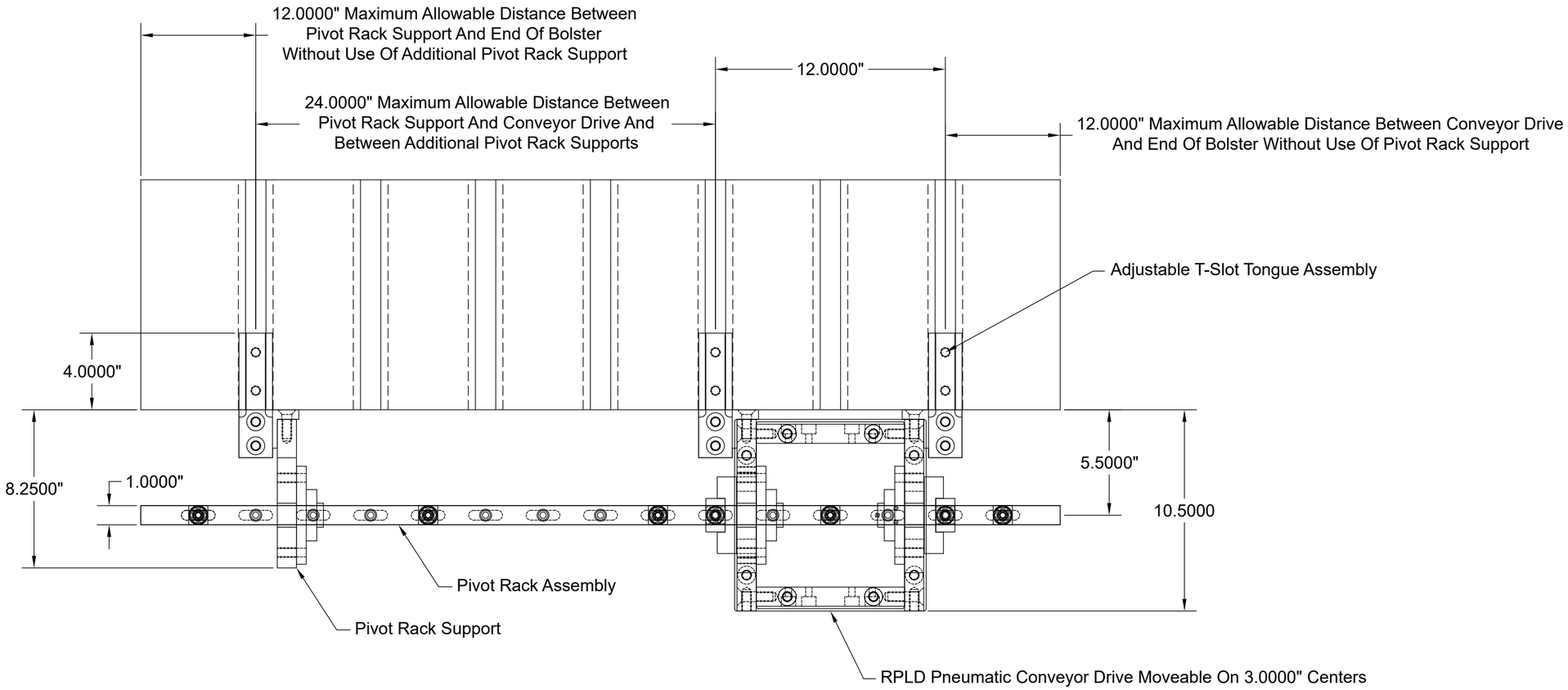

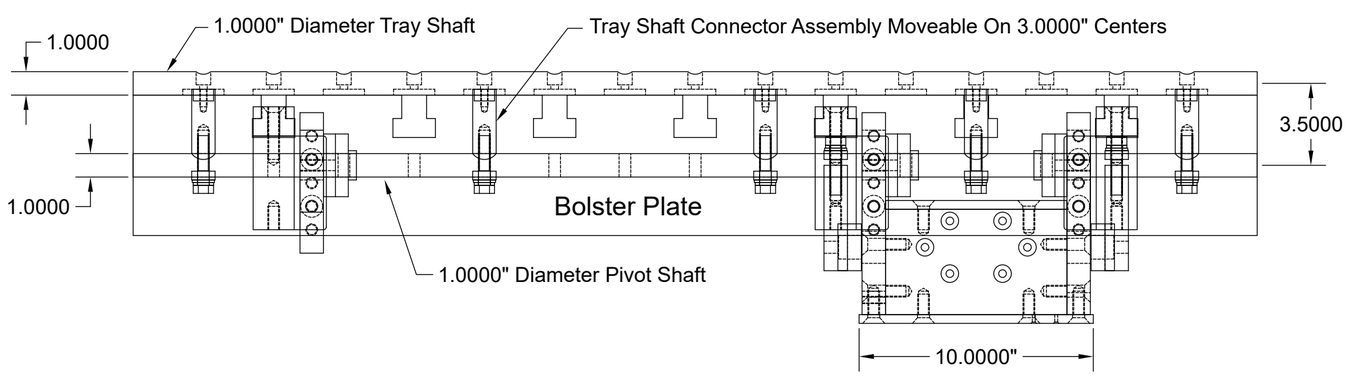

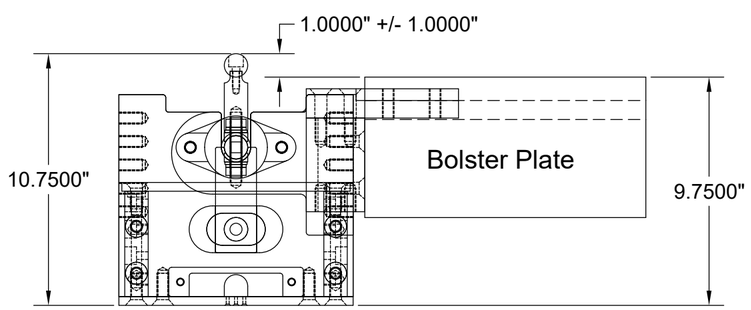

Pneumatic Innovations LLC

Radial Pro-LD Conveyor System

T-Slot Tongue Mounting Dimensional Information