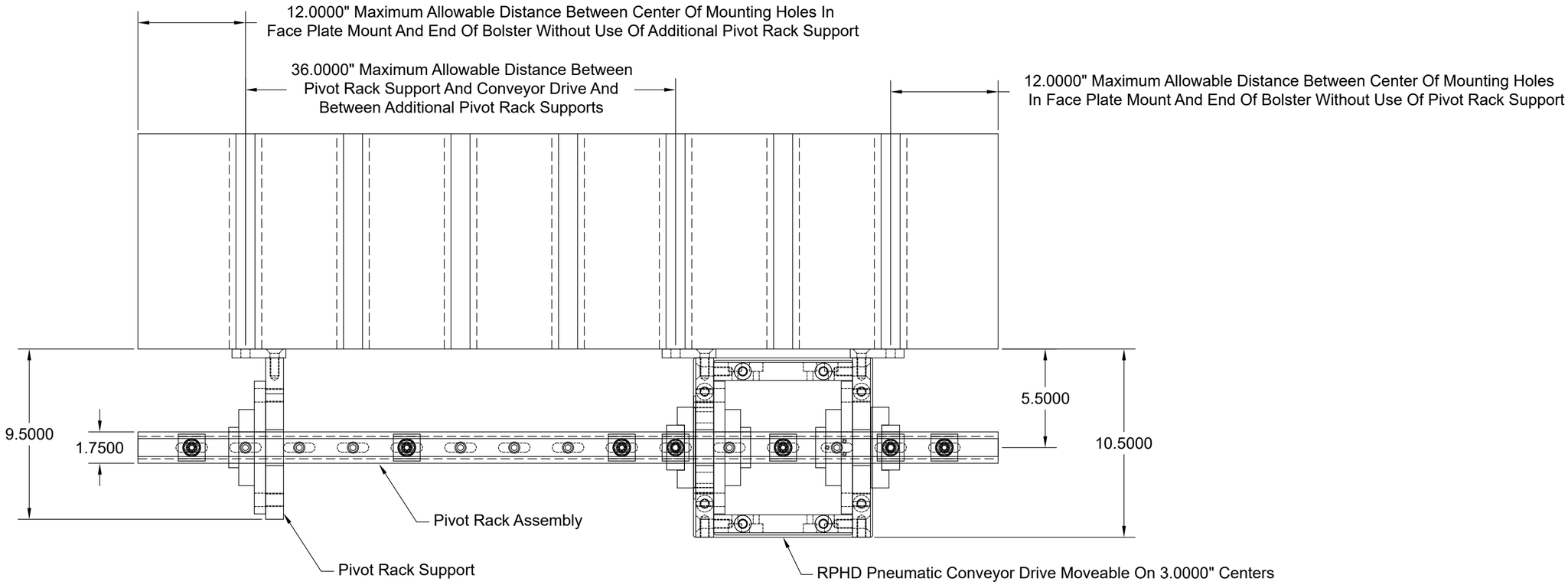

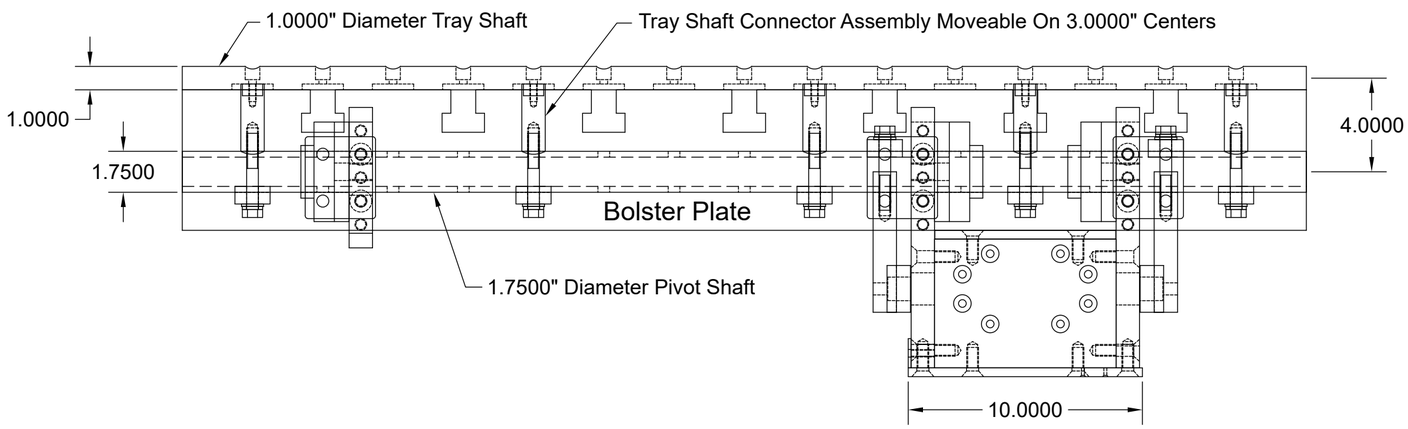

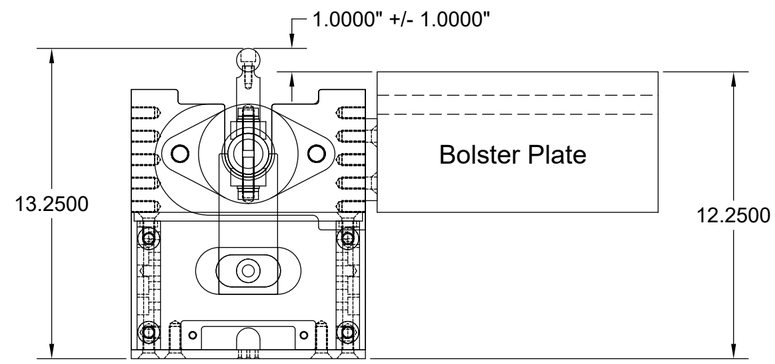

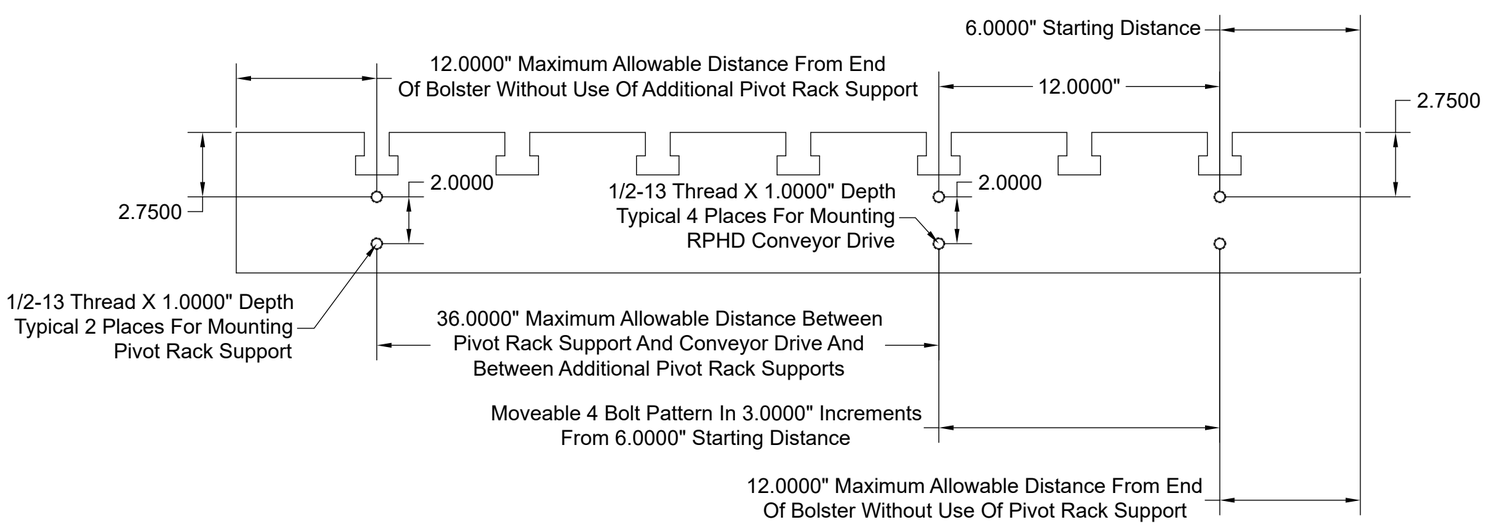

Pneumatic Innovations LLC

Radial Pro-HD Conveyor System

Standard Face Plate Mounting Dimensional Information